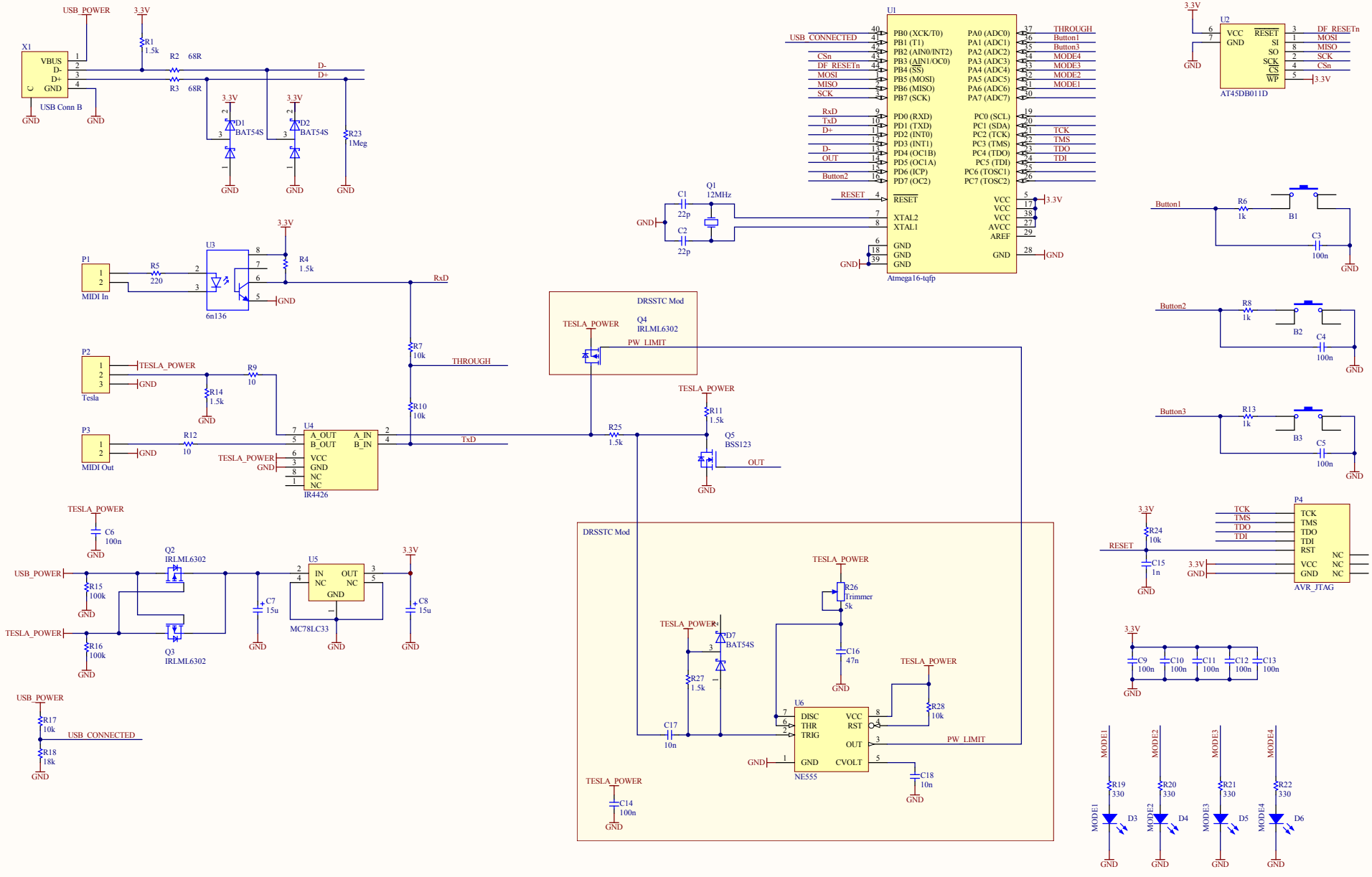

Project: i2

Title: *

Sheet of

Date: 11/29/2009 Time: 12:07:09 PM

BSVi